5-1. THE EXPLODED VIEW OF TOP COVER ASSEMBLY

: Non-Service Part

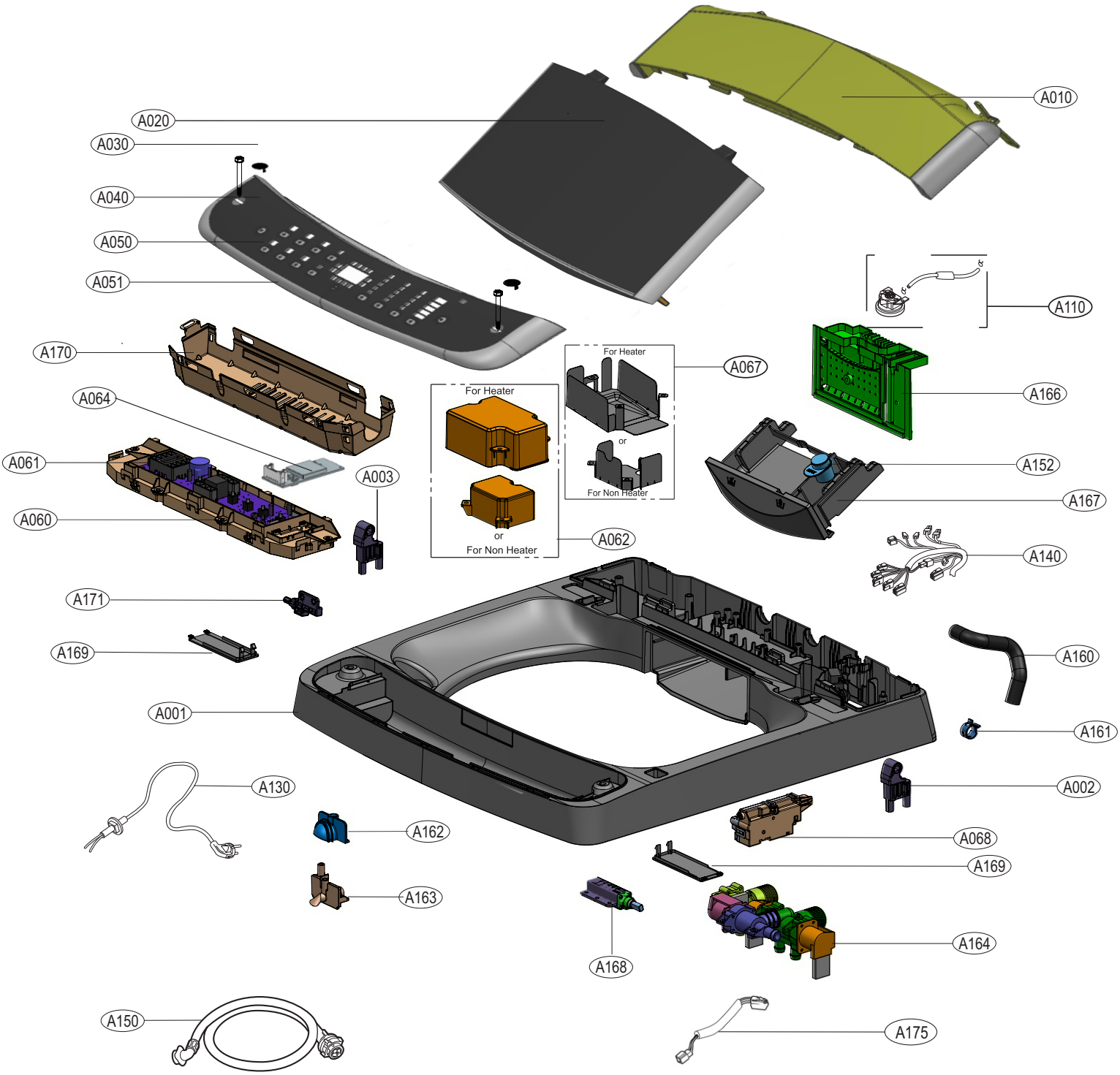

5-2 THE EXPLODED VIEW OF OUT CASE ASSEMBLY

: **Service Part**

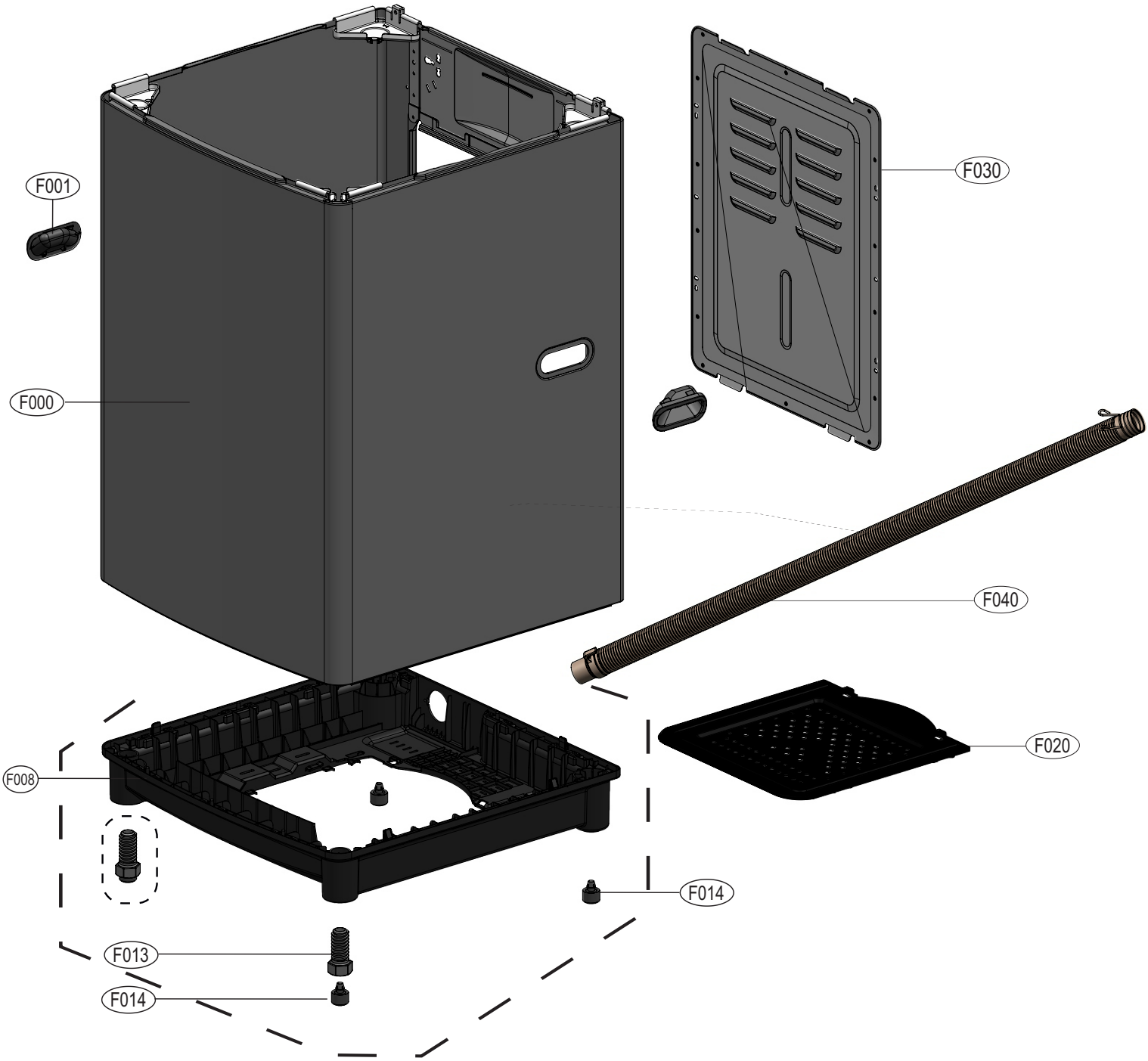

5-3. THE EXPLODED VIEW OF TUB ASSEMBLY
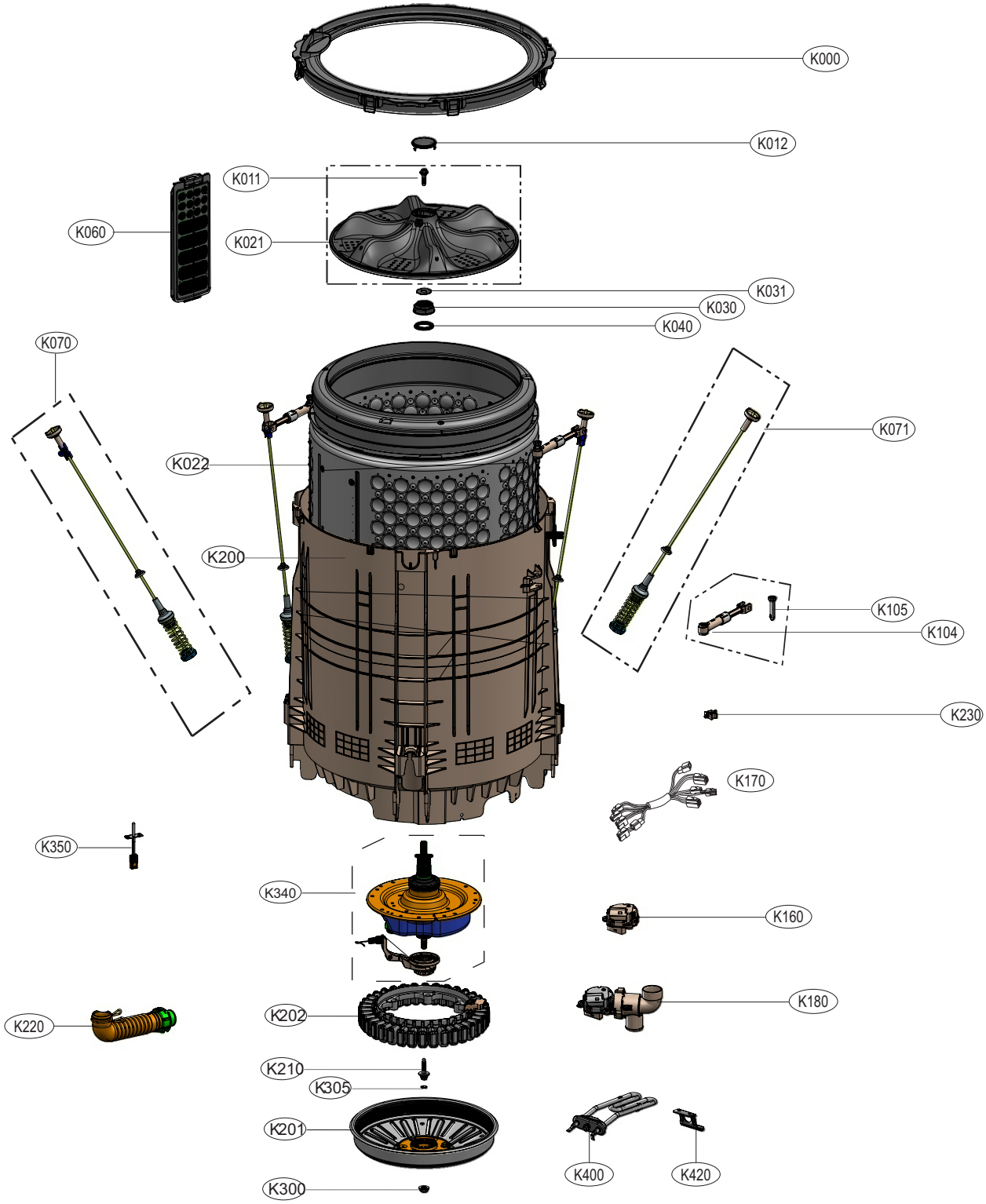
: Non-Service Part